VETTE TAIWAN CO., LTD

ADDRESS: 8/F, NO.168, RuiGuang Road, NeiHu 114, Taipei, Taiwan R.O.C.
TEL:886-2-7720-1188 FAX:886-2-7720-1166 E-MAIL:sales@vette.com.tw

FOR APPROVAL

WE ARE PLEASED IN SUBMITTING YOU HEREWITH OUR SPECIFICATION, DRAWING TOGETHER WITH SAMPLES FOR YOUR APPROVAL. PLEASE RETURN TO US ONE COPY WITH YOUR AUTHORIZED SIGNATURE AS APPROVED.

CUSTOMER : **Arima Computer Corporation**

DESCRIPTION : **CPU Cooler**

PART NUMBER : **EU-HS07-04**

ISSUE DATE : **Jan. 6, 2005**

ISSUE BY :

Approved By	Reviewed By	Written By
	Captain 2005.1.6	Sally Jan. 6, 2005

CUSTOMER'S PART NUMBER	
APPROVED DATE	
APPROVED SIGNATURE	

REVISIONS							
REV	DESCRIPTION	DFT	DATE	CHK	DATE	APVD	DATE
S-00	DRAWN	EAGLE	04.12.28	SALLY			
S-01	MODIFY DRAWN	Peter	05.01.08				

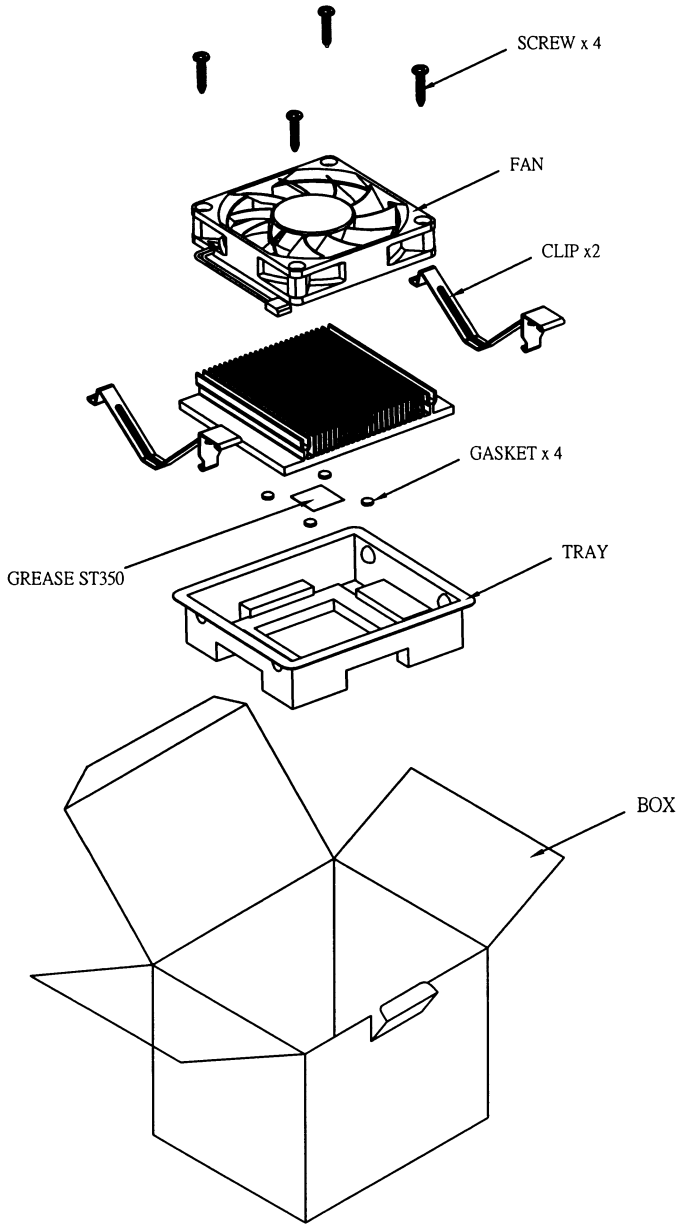

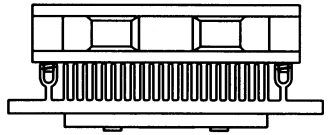

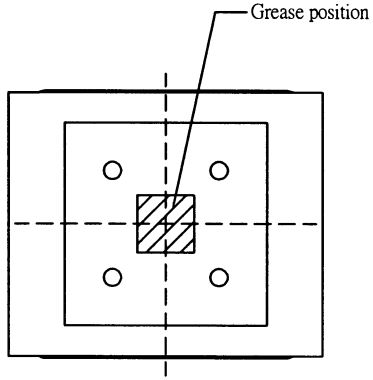

NOTE:

Put the heatsink on top of the RM ,

then add 2pcs of clip.

The thickness of the white box: 2 mm min corrugated cardboard.

Part Description	Part Number	Q'TY
TRAY	0902430	1
GASKET	085P057	4
BOX	0901026	48/48
SCREW	082M026	4
GREASE ST350	021ST15	0.1035g/pcs
CLIP	080M099	2
FAN	050DT7015HC1200	1
HS07	072HS0708061W00	1

Cross section area (MM^2) | Weight (g)

Vette (BVI) Ltd	MATERIAL: /	FINISH: /	UNIT: MM	SCALE: 1:1	PART NAME: HS07 COOLER F041251(04122101)	DWG NO. EU-HS07-04
TOLERANCE UNLESS NOTED: 0.0~5.0 ±0.2, 5.0~20.0 ±0.3, 20.0~50.0 ±0.5, 50.0~100.0 ±0.9, ANGULAR ±3°	APPROVED BY: Captain	CHECKED BY: Sally	DRAWN BY: Peter	DATE: 05.01.08	PART NO. 10HS07DT1ST15000	REVISION S-01

http://www.vette.com.tw Tel:886-2-77201666 Fax:886-2-77201166 http://www.vette.com.tw Tel:86-769-3377088 Fax:86-769-3710088

REV. C 2004/11/01

REVISIONS							
REV	DESCRIPTION	DFT	DATE	CHK	DATE	APVD	DATE
S-00	DRAWN	Peter	04.12.23	SALLY	04.12.23		

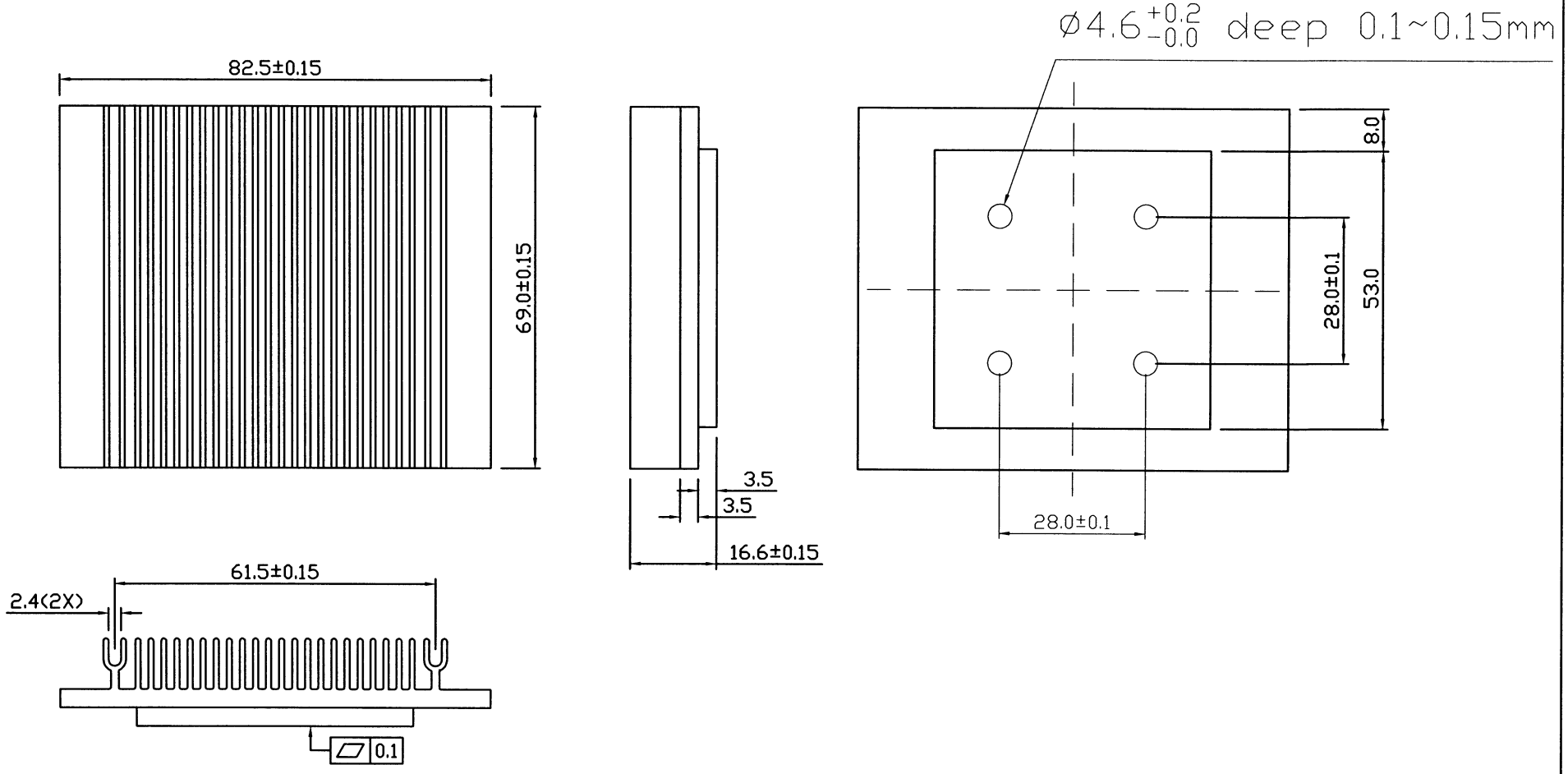

Cross section area (MM^2)		Weight (g)		Item	Part Description	Part Number	Q'TY

Vette (BVI) Ltd	MATERIAL	FINISH	UNIT	SCALE	PART NAME:	DWG NO.
	AL 6063-T5	Clear Anodize	MM	1:1	HS07 F041251(04122101)	72-HS07-02
TOLERANCE UNLESS NOTED: 0.0~5.0 ±0.2; 5.0~20.0 ±0.3; 20.0~50.0 ±0.5; 50.0~100.0 ±0.9; ANGULAR ±3°	APPROVED BY: Captain	CHECKED BY: Sally	DRAWN BY: Peter	DATE: 04/12/23	PART NO.: 072HS0708061W00	REVISION: S-00

http://www.vette.com.tw Tel:886-2-77201666 Fax:886-2-77201166 http://www.vette.com.tw Tel:86-769-3377088 Fax:86-769-3710088

REV. C 2004/11/01

謝崗六合鋁制品廠

地址:廣東省東莞謝崗銀湖工業園　TEL:0769-7681222　FAX:0769-7681606

Material Analysis

CNS2068 spec. of Al 6063

Al	Chemical component (%)								
6063	SI	FE	CU	MN	MG	CR	ZN	NI	AL
	0.2-0.6	0.35以	0.1以下	0.1以下	0.45-0.9	0.1以下	0.1以下	0.1以下	餘量

Chemical analysis report

6063			Component		(%)	
Si 0.4308	Fe 0.1422	Cu 0.0094	Mn 0.0033	Mg 0.513	Zn 0.0018	Ni 0.0048
Cr 0.0026	Pb 0.0022	Sn <0.0010	Ti 0.0121	B 0.0012	Be <0.0010	Bi 0.0030

六合擠型廠

謝崗六合鋁制品廠
業務專用章

REVISIONS							
REV	DESCRIPTION	DFT	DATE	CHK	DATE	APVD	DATE
S-00	DRAWN	Captain	05.01.17	SALLY	05.01.17		
A							

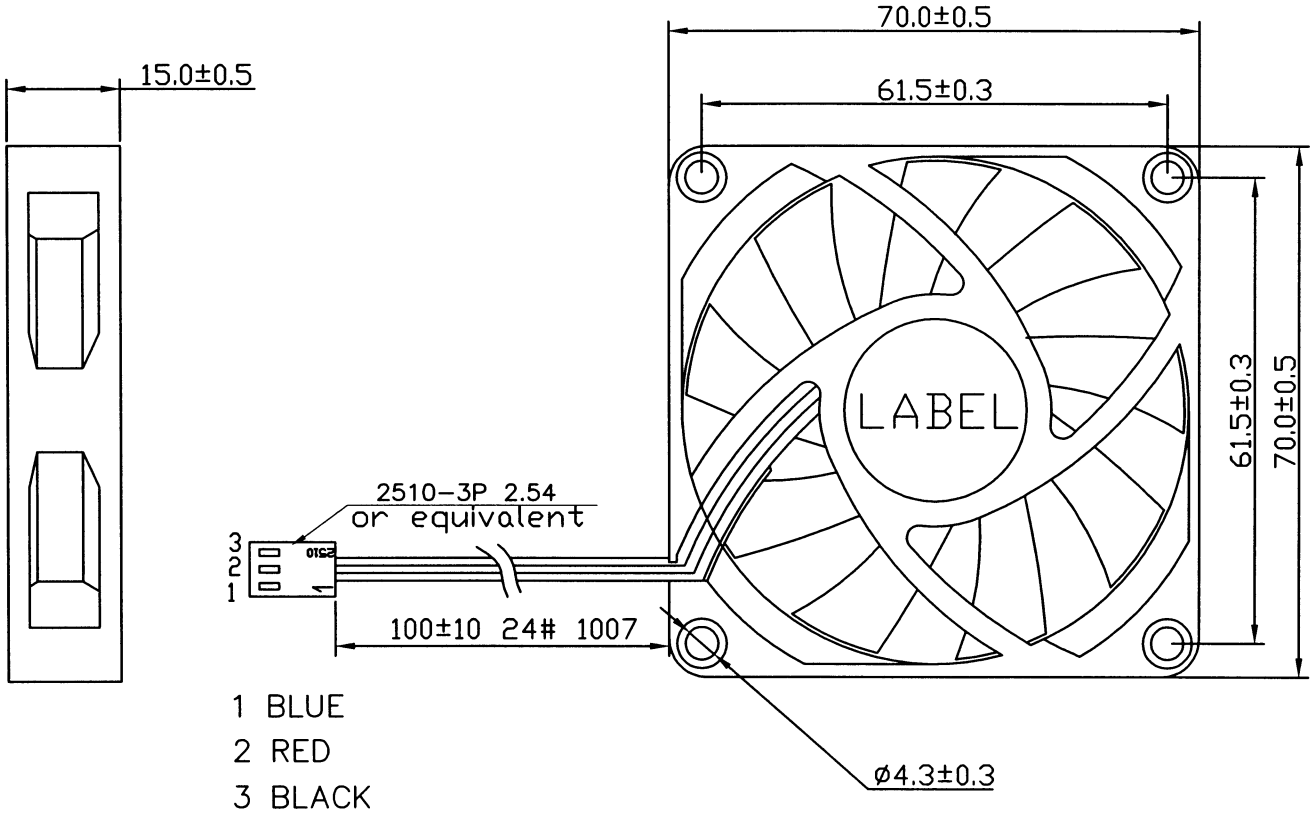

Voltoge	12V
Current	0.26A
Bearing	1B1S
Speed	4300±10 RPM
Connector	2510-3P Pitch : 2.54
Wire 1	UL1007 24# BLACK(-)
Wire 2	UL1007 24# RED(+)
Wire 3	UL1007 24# BLUE(FG)

Item	Part Description	Part Number	Q'TY

VETTE Vette (BVI) Ltd		MATERIAL PBT	FINISH BLACK	UNIT MM	SCALE —	PART NAME: DELTA AFB0712HHB	DWG NO. 50-DT7015-01
	TOLERANCE UNLESS NOTED	0.0~ 5.0 ±0.2 5.0~ 20.0 ±0.3 20.0~ 50.0 ±0.5 50.0~100.0 ±0.9 R=0.5 ANGULAR ±3°	APPROVED BY Captain	CHECKED BY Sally	DRAWN BY Captain	DATE 05.01.17	PART NO. 050DT7015HC1200	REVISION S-00

http://www.vette.com.tw Tel:886-2-77201666 Fax:886-2-77201166 http://www.vette.com.tw Tel:86-769-3377088 Fax:86-769-3710088

REV. C 2004/11/01

DELTA ELECTRONICS, INC.
252, SHANG YING ROAD, KUEI SAN
TAOYUAN HSIEN 333, TAIWAN, R. O. C.

TEL : 886-(0)3-3591968
FAX : 886-(0)3-3591991

SPECIFICATION FOR APPROVAL

****

Customer: VETTE

Description: DC FAN

Customer P/N: REV:

Delta Model NO.: AFB0712HHB-5A34

Sample Rev: 00 Issue NO:

Sample Issue Date: JAN.11.2005. Quantity:

1. SCOPE:

THIS SPECIFICATION DEFINES THE ELECTRICAL AND MECHANICAL CHARACTERISTICS OF THE DC BRUSHLESS AXIAL FLOW FAN. THE FAN MOTOR IS WITH TWO PHASES AND FOUR POLES.

2. CHARACTERS:

ITEM	DESCRIPTION
RATED VOLTAGE	12 VDC
OPERATION VOLTAGE	4.0 - 13.8 VDC
START VOLTAGE (ENVIRONMENT TEMPERATURE 25°C)	$\leq$ 5.0 VDC.
INPUT CURRENT	0.28 (MAX. 0.45) A
INPUT POWER	3.36 (MAX. 5.40) W
SPEED	4300 R.P.M. (REF.)
MAX. AIR FLOW (AT ZERO STATIC PRESSURE)	1.063 (MIN. 0.957) M^3/MIN. 37.54 (MIN. 33.80) CFM
MAX. AIR PRESSURE (AT ZERO AIRFLOW)	5.33 (MIN. 4.32) mmH_2O 0.210 (MIN. 0.170) $inchH_2O$
ACOUSTICAL NOISE (AVG.)	38.5 (MAX. 42.5) dB-A
INSULATION TYPE	UL: CLASS A

(continued)

PART NO:

DELTA MODEL: AFB0712HHB-5A34

INSULATION STRENGTH	10 MEG OHM MIN. AT 500 VDC (BETWEEN FRAME AND (+) TERMINAL)
DIELECTRIC STRENGTH	5 mA MAX. AT 500 VAC 60 Hz ONE MINUTE, (BETWEEN FRAME AND (+) TERMINAL)
EXTERNAL COVER	OPEN TYPE
LIFE EXPECTANCE	70,000 HOURS CONTINUOUS OPERATION AT 40 °C WITH 15 ~ 65 %RH.
ROTATION	CLOCKWISE VIEW FROM NAME PLATE SIDE
OVER CURRENT SHUT DOWN	THE CURRENT WILL SHUT DOWN WHEN LOCKING ROTOR.
LEAD WIRE	UL 1007 -F- AWG #24 BLACK WIRE NEGATIVE(-) RED WIRE POSITIVE(+) BLUE WIRE FREQUENCY(-F00)

NOTES:
1. ALL READINGS ARE MEASURED AFTER STABLY WARMING UP THROUGH 10 MINUTES.
2. THE VALUES WRITTEN IN PARENS , ( ), ARE LIMITED SPEC.
3. ACOUSTICAL NOISE MEASURING CONDITION:

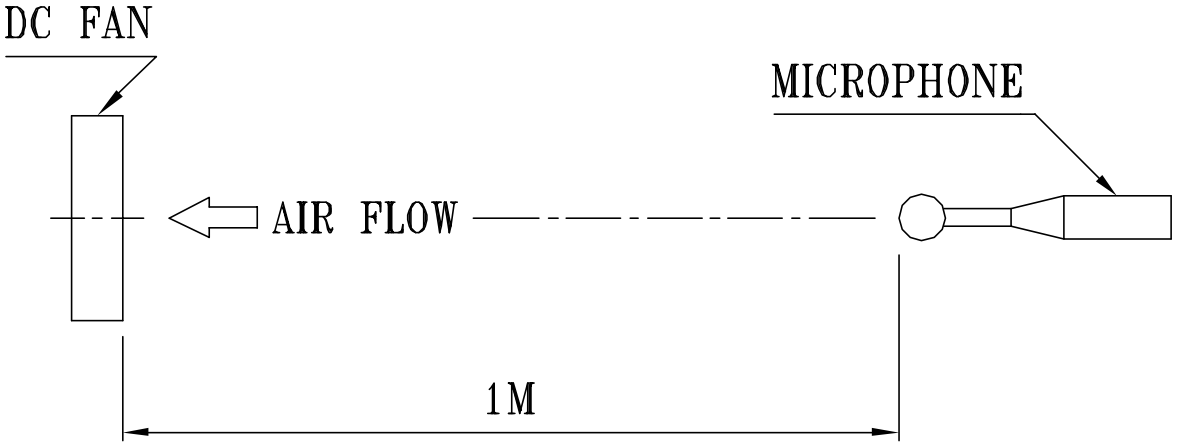

NOISE IS MEASURED AT RATED VOLTAGE IN FREE AIR IN ANECHOIC CHAMBER WITH B & K SOUND LEVEL METER WITH MICROPHONE AT A DISTANCE OF ONE METER FROM THE FAN INTAKE.

PART NO:

DELTA MODEL: AFB0712HHB-5A34

3. MECHANICAL:

3-1. DIMENSIONS ---------- SEE DIMENSIONS DRAWING

3-2. FRAME ---------- PLASTIC UL: 94V-0

3-3. IMPELLER ---------- PLASTIC UL: 94V-0

3-4. BEARING SYSTEM ---------- TWO BALL BEARINGS

3-5. WEIGHT ---------- 47 GRAMS

4. ENVIRONMENTAL:

4-1. OPERATING TEMPERATURE ---------- -10 TO +70 DEGREE C

4-2. STORAGE TEMPERATURE ---------- -40 TO +75 DEGREE C

4-3. OPERATING HUMIDITY ---------- 5 TO 90 % RH

4-4. STORAGE HUMIDITY ---------- 5 TO 95 % RH

5. PROTECTION:

5-1. LOCKED ROTOR PROTECTION

IMPEDANCE OF MOTOR WINDING PROTECTS MOTOR FROM FIRE IN 96 HOURS OF LOCKED ROTOR CONDITION AT THE RATED VOLTAGE.

5-2. POLARITY PROTECTION

BE CAPABLE OF WITHSTANDING IF REVERSE CONNECTION FOR POSITIVE AND NEGATIVE LEADS.

6. RE OZONE DEPLETING SUBSTANCES:

6-1. NO CONTAINING PBBs, PBBOs, CFCs, PBBEs, PBDPEs AND HCFCs.

7. PRODUCTION LOCATION

7-1. PRODUCTS WILL BE PRODUCED IN CHINA OR THAILAND OR TAIWAN.

PART NO:

DELTA MODEL: AFB0712HHB-5A34

8. BASIC RELIABILITY REQUIREMENT:

8-1. THERMAL CYCLING	LOW TEMPERATURE: -40°C HIGH TEMPERATURE: +80°C SOAK TIME: 30 MINUTES TRANSITION TIME < 5 MINUTES DUTY CYCLES: 5
8-2. HUMIDITY EXPOSURE	TEMPERATURE: +25°C ~ +65°C HUMIDITY: 90-98% RH @ +65°C FOR 4 HOURS/CYCLE POWER: NON-OPERATING TEST TIME: 168 HOURS
8-3. VIBRATION	TEMPERATURE: +25°C ORIENTATION: X, Y, Z POWER: NON-OPERATING VIBRATION LEVEL: OVERALL gRMS=3.2

FREQUENCY(Hz)	PSD(G^2/Hz)
10	0.040
20	0.100
40	0.100
800	0.002
1000	0.002

TEST TIME: 2 HOURS ON EACH ORIENTATION

8-4. MECHANICAL SHOCK	TEMPERATURE: +20°C ORIENTATION: X, Y, Z POWER: NON-OPERATING ACCELERATION: 20 G MIN. PULSE: 11 ms HALF-SINE WAVE NUMBER OF SHOCKS: 5 SHOCKS FOR EACH DIRECTION
8-5. LIFE	TEMPERATURE: MAX , OPERATING TEMPERATURE POWER: OPERATING DURATION: 1000 HOURS MIN.

PART NO:

DELTA MODEL: AFB0712HHB-5A34

9. P & Q CURVE:

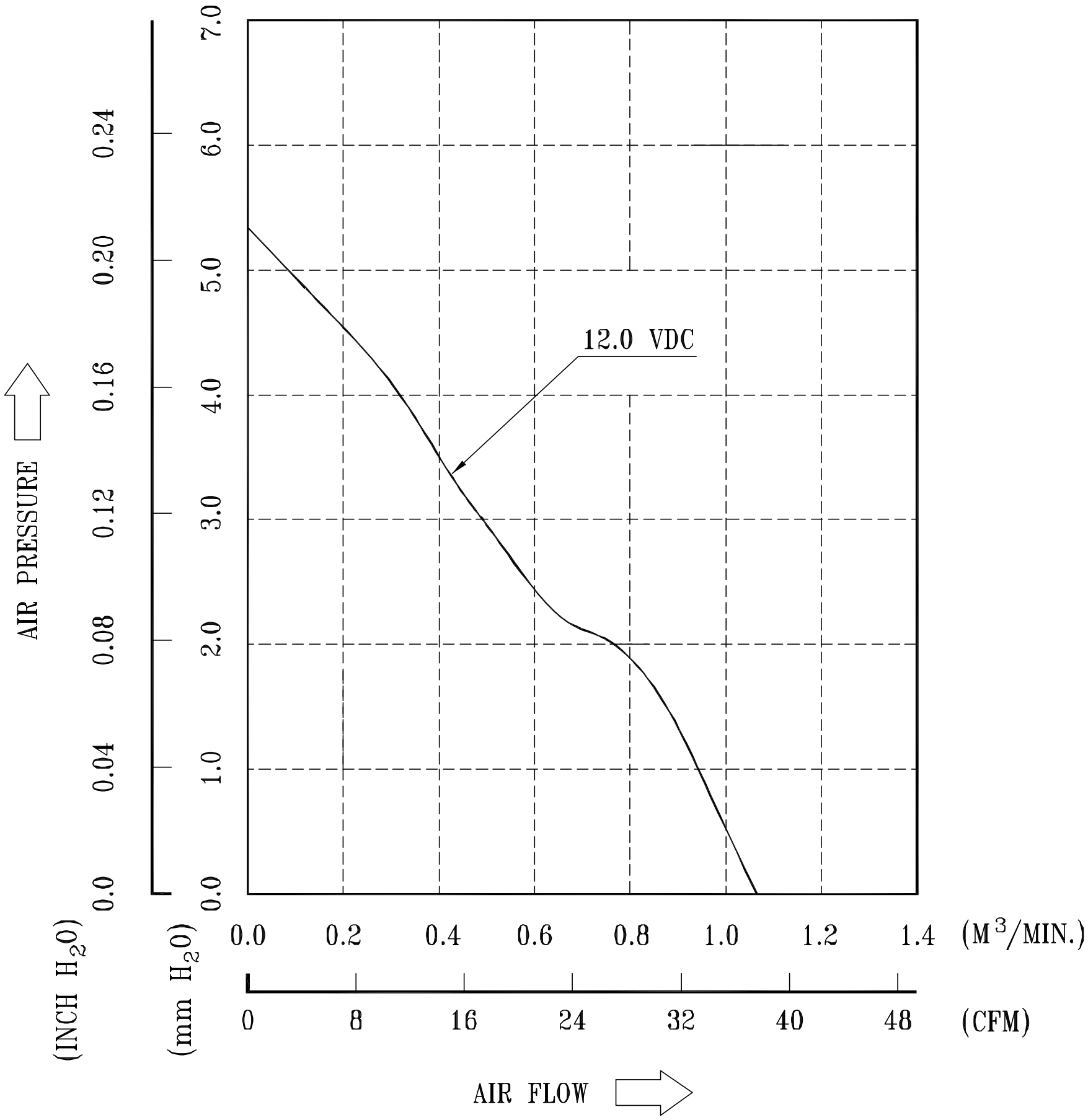

* TEST CONDITION: INPUT VOLTAGE ----- OPERATION VOLTAGE
TEMPERATURE ------ ROOM TEMPERATURE
HUMIDITY ---------- 65%RH

PART NO:

DELTA MODEL: AFB0712HHB-5A34

10. DIMENSION DRAWING:

LABEL:

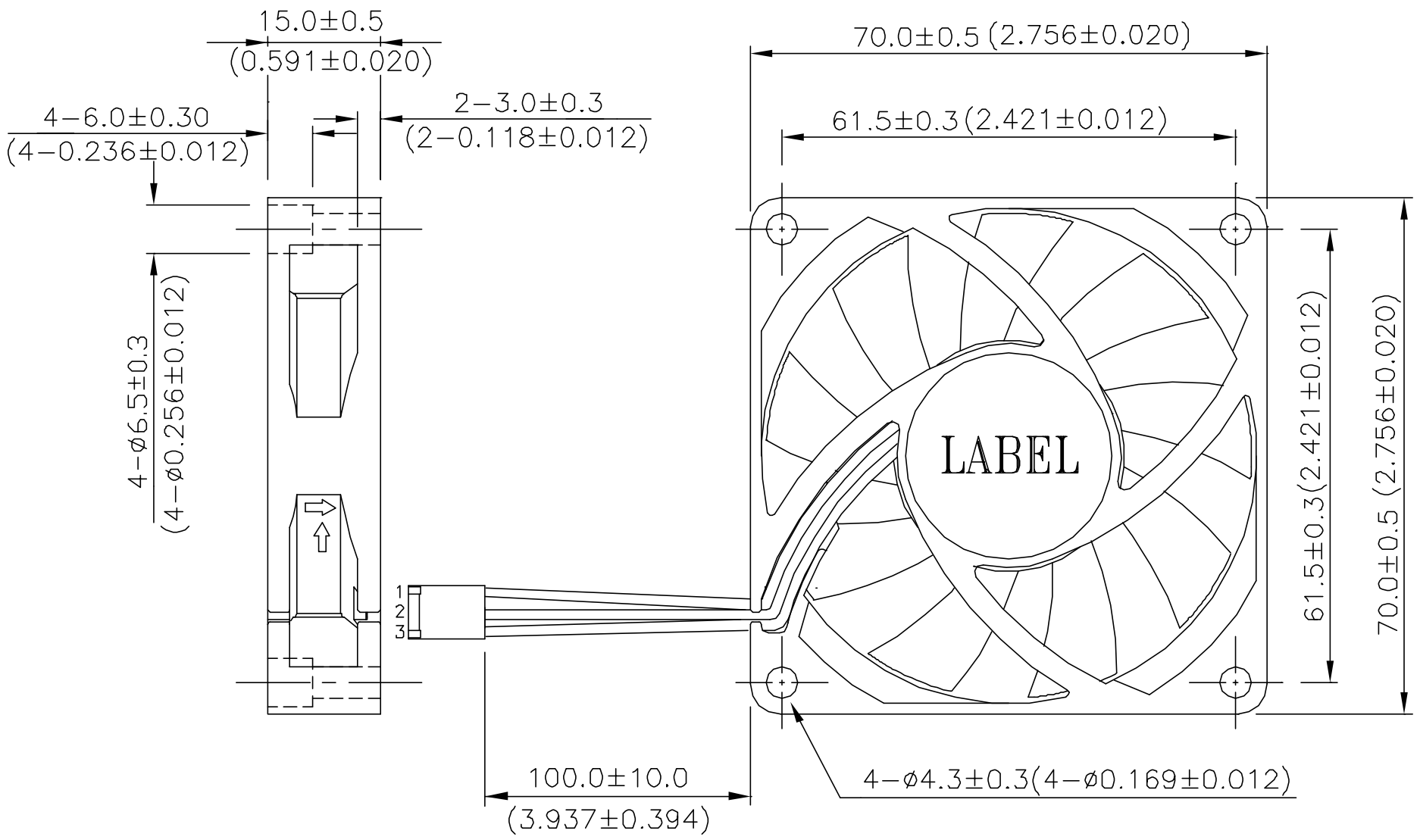

UNIT: mm(INCH)

NOTES:

1. LEAD WIRE: UL1007 AWG#24
   PIN 1: BLACK WIRE---(-)
   PIN 2: RED WIRE----(+)
   PIN 3: BLUE WIRE---(F00)
2. HOUSING: MOLEX 2695-03 22-01-3037 OR EQUIVALENT
3. TERMINAL: MOLEX 2759T 08-50-0113 OR EQUIVALENT

PART NO:

DELTA MODEL: AFB0712HHB-5A34

11. FREQUENCY GENERATOR (FG) SIGNAL:

1. OUTPUT CIRCUIT - OPEN COLLECTOR MODE:

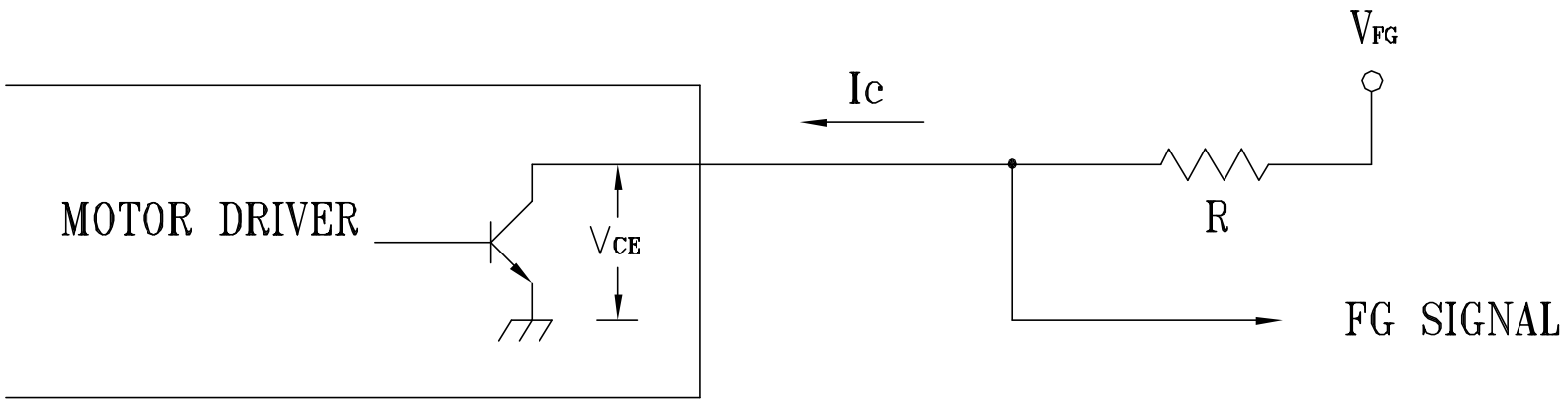

CAUTION:
THE LEAD WIRE OF FG SIGNAL CAN NOT TOUCH
THE LEAD WIRE OF POSITIVE OR NEGATIVE.

2. SPECIFICATION:

V_{CE} (sat)=0.5V MAX. V_{FG} =15VDC MAX.

I_C =5mA MAX. $R \geq V_{FG}/I_C$

3. FREQUENCY GENERATOR WAVEFORM:

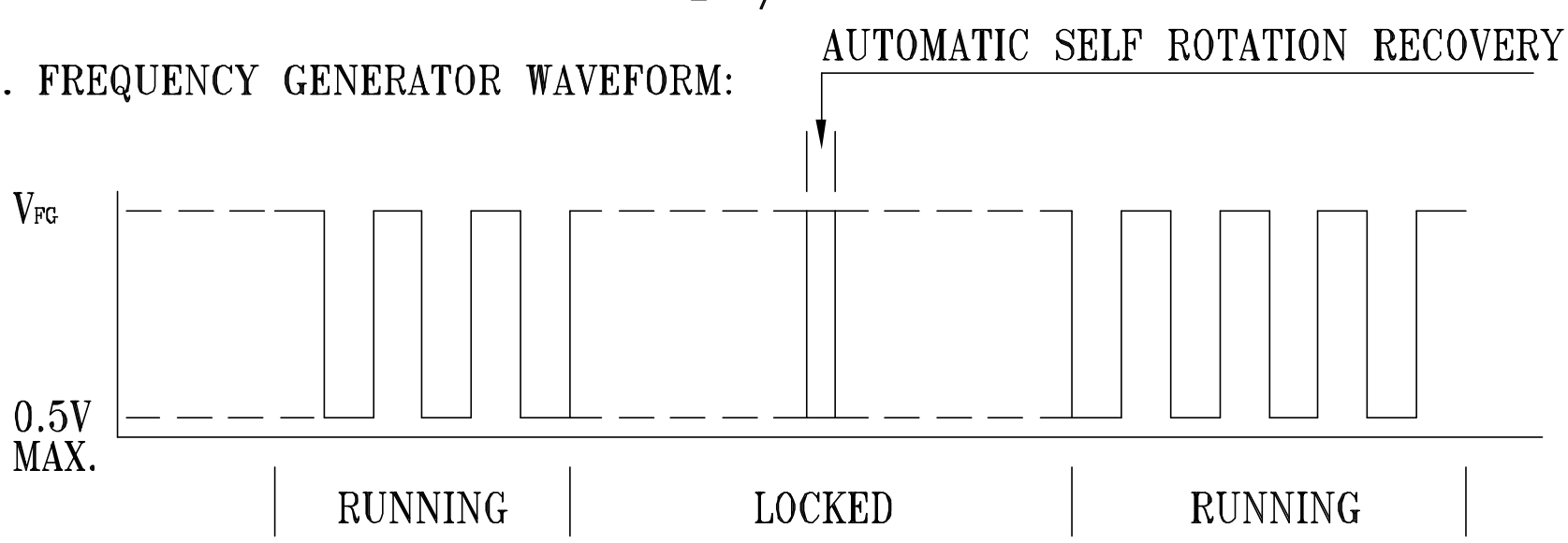

FAN RUNNING FOR 4 POLES

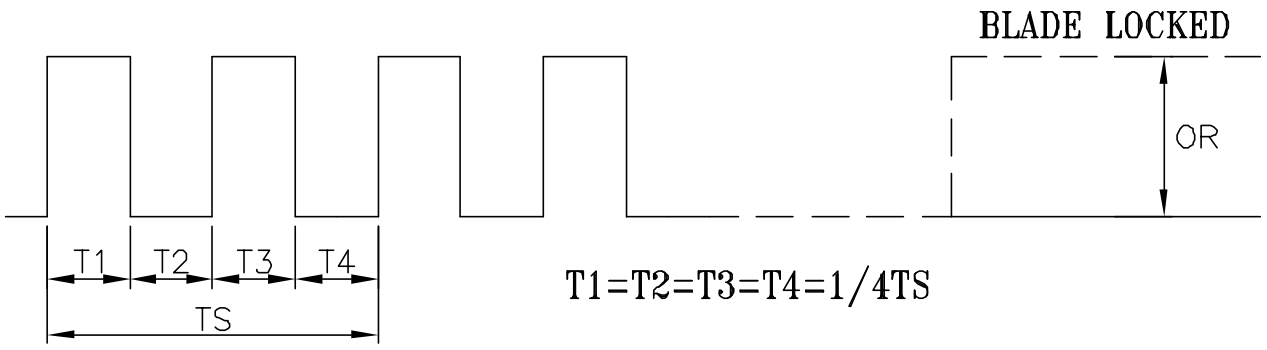

T1=T2=T3=T4=1/4TS

N=R.P.M
TS=60/N(SEC)
*VOLTAGE LEVEL AFTER BLADE LOCKED
*4 POLES

Descriptions:

1. **Delta will not guarantee the performance of the products if the application condition falls outside the parameters set forth in the specification.**

2. **A written request should be submitted to Delta prior to approval if deviation from this specification is required.**

3. **Please exercise caution when handling fans. Damage may be caused when pressure is applied to the impeller, if the fans are handled by the lead wires, or if the fans are hard-dropped to the production floor.**

4. **Except as pertains to some special designs, there is no guarantee that the products will be free from any such safety problems or failures as caused by the introduction of powder, droplets of water or encroachment of insect into the hub.**

5. **The above-mentioned conditions are representative of some unique examples and viewed as the first point of reference prior to all other information.**

6. **It is very important to establish the correct polarity before connecting the fan to the power source. Positive (+) and Negative (-). Damage may be caused to the fans if connection is with reverse polarity, as there is no foolproof method to protect against such error.**

7. **Delta fans are not suitable where any corrosive fluids are introduced to their environment.**

8. **Please ensure all fans are stored according to the storage temperature limits specified. Do not store fans in a high humidity environment. We highly recommend performance testing is conducted before shipping, if the fans have been stored over 6 months.**

9. **Not all fans are provided with the Lock Rotor Protection feature. If you impair the rotation of the impeller for the fans that do not have this function, the performance of those fans will lead to failure.**

10. **Please be cautious when mounting the fan. Incorrect mounting of fans may cause excess resonance, vibration and subsequent noise.**

11. **It is important to consider safety when testing the fans. A suitable fan guard should be fitted to the fan to guard against any potential for personal injury.**

12. **Except where specifically stated, all tests are carried out at relative (ambient) temperature and humidity conditions of 25°C, 65%. The test value is only for fan performance itself.**

13. **Be certain to connect an "over 4.7μF" capacitor to the fan externally when the application calls for using multiple fans in parallel, to avoid any unstable power.**

DELTA ELECTRONICS, INC.

DC FAN LIFE EXPERIMENT REPORT

Available for these models with lower speed and same physical structure. All model may be followed by Rxx or Fxx series suffixes. This test report applies to **AFB 70x70x15 mm** series as the right table	AFB0712HHB	AFB0712HB	AFB0712MB	AFB0712LB	
	AFB0724HHB	AFB0724HB	AFB0724MB	AFB0724LB	
Representative Test P/N :AFB0712HHB					
Equipment: 1.Oven: F00-5, E24-T060 2. DC Source: GW GPC-3060D			On/Off Cycles: Every 500 hours		

◎ **L_{10} Expectancy: 70,000 hours minimum @ fan rated voltage and the temperature of 40℃**

According to the equation for **Weibull distribution**, **MTTF ≒ $7\times L_{10}$ = 490,000 hours**

And we rely on a zero failure Weibull test strategy and accelerated testing technique, to determine the total test time **(t)** for verifying the above life estimation by the equations,

$$t = 1.036\times MTTF\times[(B_{r;c})\div n]^{0.91}\div A_F, \text{ and } A_F = 2^{(Ts-Tu)/10}$$

where, $(B_{r;c})$ is Poisson distribution factor with the failure number of r equal to 0 and the decimal confidence level of c equal to 0.90(90%), and

Stress/Elevated Temperature Ts (℃)	Unstress Temperature Tu (℃)	Acceleration Factor A_F	Quantity of Test Devices n (pcs)	Poisson Distribution Factor $B_{r;c}$	Required test time with zero failure t (hours)	Actual test time with zero failure t (hours)	Verified MTTF 40 ℃ (hours)	Verified L_{10} 40 ℃ (hours)
70	40	8.00	56	2.303	3,478	13,513.0	1,903,907	271,987

Test Progress:

Date for Test Beginning	Date for Test Termination (at least)	Current Test Status			Current Total Test Time (hours)
2002/6/13 9:30 AM	2002/12/20 5:16 AM	☐ In process	☑ In process (exceed requested)	☐ Termination	13513.0

Herewith , we could assume as right on the basis of above test result. Besides, if the actual test time exceed the required, it comes out that those fans' L_{10} expectancy and MTTF are greater than the warrant. (**MTTF :** means Mean Time To Failures, it should be used in a non-repairable system setting. Now we show the MTTF in our life report, that's because we will not repair the failed fans during life experiment. **MTBF**: means Mean Time Between failures, it should be used in a repairable system setting. **Basically , MTBF is equal to MTTF , they use same formula to work out a life data.**)

Fan permission criteria for the measurement after test :
1. For current, the limit is less than spec.(max.).
2. For speed, the allowable descrease is less than 15%.
3. For noise, the limit is less than spec.(max.). + 3 dB

Temperature for MTTF Estimation (℃)	Acceleration Factor A_F	Estimated MTTF (hours)	Estimated L_{10} (hours)
25	22.63	5,385,061	769,294
30	16.00	3,807,813	543,973
40	8.00	1,903,907	271,987
50	4.00	951,953	135,993
60	2.00	475,977	67,997
70	1.00	237,988	33,998

QE File No.	Time-out for function test or others (hours)	Issued Date	Reported By	Approved By
02FNL015	1078.00	2004/2/11 8:30 AM	Rola Liu	Y Y. Shieh

DELTA ELECTRONICS, INC.

DC FAN FUNCTION TEST RECORD FOR LIFE EXPERIMENT

Available for these models with lower speed and same physical structure. All model may be followed by Rxx or Fxx series suffixes. This test report applies to AFB 70x70x15 mm series as the right table	AFB0712HHB	AFB0712HB	AFB0712MB	AFB0712LB	
	AFB0724HHB	AFB0724HB	AFB0724MB	AFB0724LB	

Required Test Time (hrs)	Date for Test Beginning	Date for Test Termination	Sample Size (pcs):	Failure (pcs):	Current Total Test Time (hrs)
3,478	2002/6/13 9:30 AM	2002/11/20 6:16 PM	56	0	**13513.0**

Representative Test P/N :AFB0712HHB	Current Test Status	☐ In process	☑ In process (exceed requested)	☐ Termination
Equipment: 1.Oven: F00-5, E24-T060 2. DC Source: GW GPC-3060D		On/Off Cycles: Every 500 hours		

Test Data Between Initial Test and Final Test

Sample P/N :AFB0712HHB

Sample No.	Initial Test Current Spec. (A) **0.45 Max.**	Final Test Current Spec. (A) **0.45 Max.**	Deviation (%)	Initial Test Speed Spec. (RPM) **4300 Ref.**	Final Test Speed Spec. (RPM) **4300 Ref.**	Deviation (%)	Initial Test Noise Spec. (dB A) **42.5 Max.**	Final Test Noise Spec. (dB A) **45.5 Max.**	Deviation (%)
1	0.25	0.24	-4.0	4225	4268	1.0	38.4	40.4	5.2
2	0.26	0.23	-11.5	4379	4327	-1.2	38.9	40.4	3.9
3	0.26	0.23	-11.5	4300	4302	0.0	42.1	41.9	-0.5
4	0.25	0.23	-8.0	4316	4373	1.3	38.5	40.1	4.2
5	0.25	0.28	12.0	4240	4398	3.7	38.4	40.0	4.2
6	0.26	0.24	-7.7	4285	4231	-1.3	38.7	40.7	5.2
7	0.25	0.24	-4.0	4225	4318	2.2	38.4	40.0	4.2
8	0.26	0.24	-7.7	4210	4234	0.6	38.4	39.8	3.6
9	0.26	0.28	7.7	4270	4423	3.6	38.2	40.5	6.0
10	0.25	0.24	-4.0	4300	4323	0.5	42.1	40.4	-4.0
11	0.25	0.24	-4.0	4225	4295	1.7	38.4	40.2	4.7
12	0.26	0.24	-7.7	4270	4312	1.0	38.2	40.7	6.5
13	0.25	0.24	-4.0	4300	4337	0.9	42.1	40.8	-3.1
14	0.26	0.23	-11.5	4363	4349	-0.3	38.6	40.4	4.7
15	0.26	0.23	-11.5	4316	4321	0.1	38.5	40.5	5.2
16	0.26	0.24	-7.7	4255	4329	1.7	38.1	43.0	12.9
17	0.26	0.24	-7.7	4285	4317	0.7	38.7	40.4	4.4
18	0.26	0.24	-7.7	4210	4244	0.8	38.4	40.7	6.0
19	0.26	0.24	-7.7	4255	4265	0.2	38.1	39.8	4.5
20	0.26	0.23	-11.5	4210	4291	1.9	38.4	40.5	5.5
21	0.25	0.24	-4.0	4270	4230	-0.9	38.2	40.2	5.2
22	0.26	0.24	-7.7	4285	4250	-0.8	38.7	40.6	4.9
23	0.26	0.23	-11.5	4240	4317	1.8	38.4	39.8	3.6
24	0.26	0.24	-7.7	4225	4306	1.9	38.4	41.2	7.3
25	0.26	0.23	-11.5	4225	4305	1.9	38.1	40.5	6.3
26	0.26	0.23	-11.5	4270	4273	0.1	38.2	40.2	5.2
27	0.26	0.24	-7.7	4210	4246	0.9	38.4	40.9	6.5
28	0.26	0.24	-7.7	4300	4304	0.1	42.1	40.5	-3.8
29	0.26	0.24	-7.7	4240	4323	2.0	38.4	40.4	5.2
30	0.26	0.24	-7.7	4316	4318	0.0	38.5	41.1	6.8
31	0.26	0.23	-11.5	4255	4366	2.6	38.1	41.2	8.1
32	0.26	0.23	-11.5	4270	4298	0.7	38.2	40.2	5.2
33	0.26	0.24	-7.7	4240	4247	0.2	38.4	40.8	6.3
34	0.26	0.24	-7.7	4300	4266	-0.8	42.1	40.5	-3.8
35	0.26	0.24	-7.7	4270	4269	0.0	38.2	40.0	4.7

DELTA ELECTRONICS, INC.

DC FAN FUNCTION TEST RECORD FOR LIFE EXPERIMENT

Available for these models with lower speed and same physical structure. All model may be followed by Rxx or Fxx series suffixes. This test report applies to AFB 70x70x15 mm series as the right table	AFB0712HHB	AFB0712HB	AFB0712MB	AFB0712LB	
	AFB0724HHB	AFB0724HB	AFB0724MB	AFB0724LB	

Required Test Time (hrs)	Date for Test Beginning	Date for Test Termination	Sample Size (pcs):	Failure (pcs):	Current Total Test Time (hrs)
3,478	2002/6/13 9:30 AM	2002/11/20 6:16 PM	56	0	**13513.0**

	Current Test Status	☐ In process	☑ In process (exceed requested)	☐ Termination

Equipment: 1.Oven: F00-5, E24-T060 2. DC Source: GW GPC-3060D

On/Off Cycles: Every 500 hours

Test Data Between Initial Test and Final Test

Sample No.	Initial Test Current Spec. (A) **0.45 Max.**	Final Test Current Spec. (A) **0.45 Max.**	Deviation (%)	Initial Test Speed Spec. (RPM) **4300 Ref.**	Final Test Speed Spec. (RPM) **4300 Ref.**	Deviation (%)	Initial Test Noise Spec. (dB A) **42.5 Max.**	Final Test Noise Spec. (dB A) **45.5 Max.**	Deviation (%)
36	0.26	0.24	-7.7	4210	4260	1.2	38.4	40.5	5.5
37	0.26	0.24	-7.7	4285	4272	-0.3	38.7	40.1	3.6
38	0.26	0.24	-7.7	4332	4318	-0.3	38.9	40.6	4.4
39	0.26	0.24	-7.7	4300	4301	0.0	42.1	41.5	-1.4
40	0.26	0.24	-7.7	4225	4347	2.9	38.4	40.2	4.7
41	0.26	0.24	-7.7	4347	4385	0.9	38.8	42.3	9.0
42	0.25	0.24	-4.0	4270	4232	-0.9	38.2	40.4	5.8
43	0.26	0.24	-7.7	4225	4255	0.7	38.4	40.5	5.5
44	0.25	0.24	-4.0	4240	4307	1.6	38.4	40.4	5.2
45	0.26	0.24	-7.7	4210	4242	0.8	38.4	40.6	5.7
46	0.25	0.24	-4.0	4225	4230	0.1	38.1	39.9	4.7
47	0.26	0.24	-7.7	4210	4309	2.4	38.4	40.5	5.5
48	0.26	0.24	-7.7	4240	4374	3.2	38.4	40.0	4.2
49	0.25	0.24	-4.0	4379	4320	-1.3	38.9	40.4	3.9
50	0.25	0.24	-4.0	4210	4240	0.7	38.4	42.9	11.7
51	0.26	0.24	-7.7	4332	4241	-2.1	38.9	40.6	4.4
52	0.25	0.24	-4.0	4225	4236	0.3	38.4	40.0	4.2
53	0.26	0.24	-7.7	4240	4274	0.8	38.4	40.5	5.5
54	0.25	0.24	-4.0	4316	4230	-2.0	38.8	39.3	1.3
55	0.25	0.24	-4.0	4270	4291	0.5	38.2	40.1	5.0
56	0.25	0.24	-6.6	4255	4296	1.0	38.1	42.4	11.3
X-Bar	0.257	0.244	-	4266.500	4319.389	-	38.835	40.211	-
σ	0.005	0.005	-	46.267	49.923	-	1.185	0.681	-

QE File No.	Time-out for function test or others (hrs)	Issued Date	Reported By	Approved By
02FNL015	**1078.00**	**2004/2/11 8:30 AM**	**Rola Liu**	Y Y Shieh

REVISIONS							
REV	DESCRIPTION	DFT	DATE	CHK	DATE	APVD	DATE
S-00	DRAWN	LENJIN	03.07.18	Queenie			

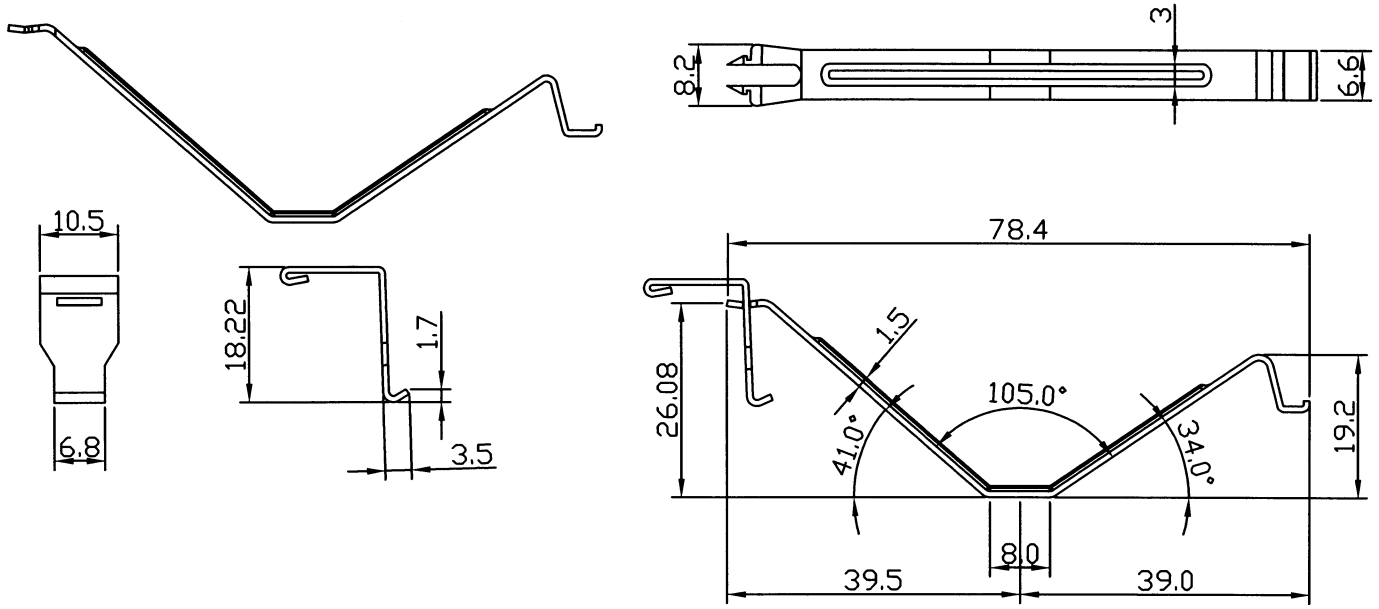

Item	Part Description	Part Number	Q'TY

Vette (BVI) Ltd		MATERIAL SK7	FINISH 表面鍍鎳	UNIT MM	SCALE 1:1	PART NAME: HS06.HS07 CLIP	DWG NO. 80M-100
	TOLERANCE UNLESS NOTED .X ±0.3 .XX ±0.2 .XXX ±0.15 R=0.5 ANGULAR ±3°	APPROVED BY Captain	CHECKED BY Sally	DRAWN BY SUN	DATE 03/10/21	PART NO. 080M099	REVISION S-01

http://www.vette.com.tw Tel:886-2-77201666 Fax:886-2-77201166
http://www.vette.com.tw Tel:86-769-3377088 Fax:86-769-3710088

REV. C 2004/11/01

请 承 认 书

SPECIFICATION FOR APPROVAL

客户

Customer 友巨电子 .

品名

Description 478-D旧模扣具

日期

Date 2005年1月13日

机型

Machinery

料号

Part No 080M099

认证号码

Approval No

深圳铭辉精密五金制造厂

SHEN ZHEN MING HUI IRONWARE FACTORY

深圳横岗安良三角龙工业区安兴路60栋

TEL:28616855

TEL:28616835
FAX:28616091

铭辉五金厂

样版测试报告

客户名称	友巨电子			样版名称		478-D扣具					
规　格				型　号							
测试项目	测试标准	测试记录									
		1	2	3	4	5	6	7	8	9	10	结果
料厚	0.8±0.05	0.82	0.84	0.78	0.82	0.78	0.79	0.80	0.82	0.84	0.80	OK
长扣:宽度1	6.6±0.2	6.58	6.60	6.60	6.58	6.58	6.62	6.60	6.62	6.58	6.60	OK
宽度2	8.2±0.2	8.22	8.20	8.22	8.22	8.20	8.20	8.20	8.22	8.20	8.22	OK
宽度3	3.0±0.2	3.00	3.02	3.02	3.00	3.00	3.00	3.00	3.07	3.02	3.02	OK
宽度4	1.8±0.2	1.85	1.84	1.82	1.85	1.84	1.84	1.85	1.82	1.85	1.82	OK
长度1	73.71±0.2	73.72	73.78	73.78	73.72	73.80	73.80	73.80	73.71	73.72	73.78	OK
长度2	8.0±0.2	7.95	7.95	8	7.95	8.02	8.02	8	7.95	7.98	8.02	OK
角度1	88±1	88	88	88	88	88	88	88	88	88	88	OK
角度2	49.1±1	49.00	49.00	49.00	49.00	49.00	49.00	49.00	49.00	49.00	49.00	OK
尾扣:宽度1	13.39±0.2	13.40	13.40	13.42	13.50	13.43	13.45	13.45	13.42	13.48	13.42	OK
宽度2	16.5±0.2	16.55	16.55	16.52	16.54	16.52	16.58	16.60	16.55	16.60	16.60	OK
宽度3	4.3±0.2	4.38	4.40	4.38	4.35	4.40	4.38	4.40	4.38	4.38	4.40	OK
磅力	30-40磅	34	35	35	37	36	36	37	38	37	36	OK
外观	有无刮花,变形,电镀不良	OK	OK	OK	OK	OK	OK	OK	OK	OK	OK	OK

使用仪器设备：卡尺,千分尺,角度尺,磅力计

备注：实记10个产品尽寸

核准： 付刚 05-1-13　　审查：　　制表：王焕平05-1-13

To: 新[illegible]
Fn: 給料

材 質 證 明 書

MATERIAL CERTIFICATE

製造編號	B2004100821	生產編號 Customer No	2004100923	開立日期 Issue Date	2004-10-09	證明書編號 Certificate No	2004100923
鋼種名稱	SK7	訂單編號 Order No		依據規範 By Standard	JIS		

專案 Item	鋼卷編號 Coil No	厚度（MM） Thickness	寬度（MM） Width	長度（MM） Length	數量 Quantity	重量（KG） Weight	成品表面加工 Surface Finish
		0.8		COIL			
				COIL			
				COIL			
				COIL			
				COIL			
				COIL			

規格 Spec	化學（Chemical Analysis Wtx%） C	Si	Mn	P	S	Ni	Cr	Mo	N
專案 Item	0.70 0.80	0.35 max.	0.50 max.	0.030 max.	0.030 max.				
1	0.64	0.23	0.38	0.020	0.004				
2									
3									
4									
5									
6									

規格 Spec / 試片編號 Specimen	硬度 Hardness HV	降伏強度 (N/mm²) Yieldstress min	引張強度 (N/mm²) Tensile Stress min	伸長率（%） Elongation min	彎曲試驗 BendTest min
2004100923	167				OK

以上所列出的典型資料，僅供參考，並不代表技術資料的最大或最小值，也不用於最終設計。任一具體材料的資料可能與此表中所列出的資料有所不同。

Data shown are typical,For reference only,and should not be construed as maximum or minimum values for specification or for final .Data on any particular piece of material may vary from those shown heren.

如有有異常，請於三天內回復。

Only discrepancy pls contact us within3day's.

[illegible]材料公司 [illegible]田 章

技術部經理
Manager, Technology Department

REVISIONS							
REV	DESCRIPTION	DFT	DATE	CHK	DATE	APVD	DATE
S-00	DRAWN	Peter	04.12.23	SALLY			

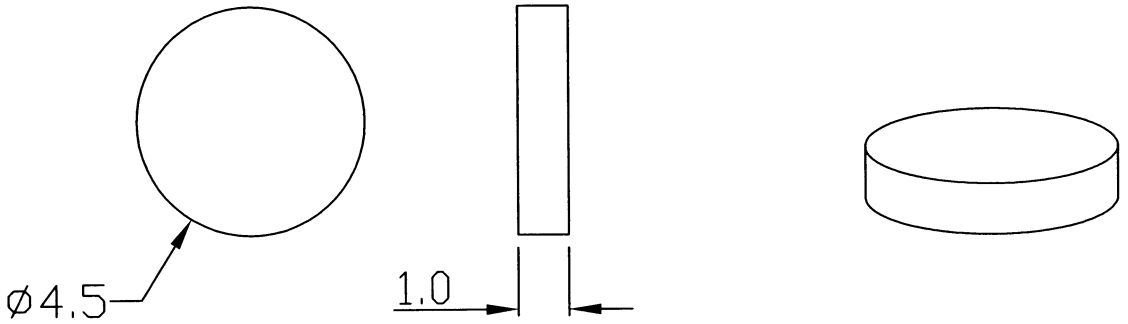

Material: Rubber , made by Shin-Etsu , Vender part number is : KE-951-U

Glge: Arcy adhesive, made by Sony Chemicals Corporation, Vender part number is: G4000

Item	Part Description	Part Number	Q'TY

Vette (BVI) Ltd	MATERIAL	FINISH	UNIT	SCALE	PART NAME:	DWG NO.
	Rubber	BLACK	MM	5:1	Gasket: F041251(04122101)	85P-58
TOLERANCE UNLESS NOTED: 0.0~5.0 ±0.1, 5.0~20.0 ±0.2, 20.0~50.0 ±0.3, 50.0~100.0 ±0.9, ANGULAR ±3°	APPROVED BY: Captain	CHECKED BY: Sally	DRAWN BY: Peter	DATE: 04/12/23	PART NO. 085P057	REVISION S-00

http://www.vette.com.tw Tel:886-2-77201666 Fax:886-2-77201166
http://www.vette.com.tw Tel:86-769-3377088 Fax:86-769-3710088

REV. C 2004/11/01

Certificate of Analysis

SHIN-ETSU SILICONE TAIWAN CO.,LTD.

Shin-Etsu Chemical Co., Ltd. Takefu Plant
2-1-5, Kitago, Takefu-shi, Fukui, Japan

Product Name	KE-951-U
Lot No.	206079J
Quantity	1,840kg
Analysis Date	2002/06/11
Customer Order Number	A20040
Issue No.	ASD52200206002706

This product was tested according to Shin-Etsu's test method and complies with the product specification of Shin-Etsu.

No	Test Item	Unit	Test Result
1	Appearance (Color)		Translucent
2	Specific Gravity :23℃		1.14
3	Plasticity (Williams, after remilling)		226
4	Hardness :Post ;Type A		52
5	Tensile Strength :Post	MPa	8.5
6	Elongation :post	%	340
7	Linear Shrinkage	%	3.8

NIKIO KOBAYASHI
Manager, Quality Assurance Section

Shin-Etsu No.: 12128752-01-01

Issue:
Shin-Etsu Chemical Co.,Ltd.
Silicone Division
6-1 Ohtemachi 2-chome, Chiyoda-ku, Tokyo, Japan
TEL (81)3-3246-5171 FAX (81)3-3246-5363

Judgment:
Shin-Etsu Chemical Co.,Ltd. Takefu Plant
Quality Assurance Department

Online Certifications Directory

QMFZ2.E174951
Plastics - Component

SHIN-ETSU SILICONE TAIWAN CO LTD
SHIN CHU IND PARK
NO 25 KUANG FU S RD
SHIN CHU, TAIWAN

E174951

									H	D	
				H	H	RTI			V	4	C
		Min.	Flame	W	A	Elec	Mech		T	9	T
Material Dsg	Color	Thk	Class	I	I		Imp	Str	R	5	I
Silicone (SI), furnished as liquid.											
KE-931TU	ALL	0.75 ONLY	HB	—	—	150	150	150	—	—	—
KE-9710SU	ALL	0.82 ONLY	HB	—	—	150	150	150	—	—	—
KE-971HU	ALL	0.82 ONLY	HB	—	—	150	150	150	—	—	—
Silicone (SI), furnished as two liquid components.											
KE1990-40	ALL	0.75	HB	—	—	105	105	105	—	—	—
KE1990-50	ALL	0.75	HB	—	—	105	105	105	—	—	—
Silicone (SI), furnished as uncured w/one or two catalysts.											
KE-944**	ALL	0.75	HB	—	—	150	150	150	—	—	—
KE-9510**	ALL	0.75	HB	—	—	150	150	150	—	—	—
KE-971T**	ALL	0.75	HB	—	—	150	150	150	—	—	—
KE-9X1**	ALL	0.75	HB	—	—	150	150	150	—	—	—

**-May be followed by the suffix U

Marking: Company name and material designation on container, wrapper or finished part.

This page and all contents are Copyright 2003 by Underwriters Laboratories Inc.®

The appearance of a company's name or product in this database does not in itself assure that products so identified have been manufactured under UL's Follow-Up Service. Only those products bearing the UL Mark should be considered to be Listed and covered under UL's Follow-Up Service. Always look for the Mark on the product.

先鋒材料精密科技

Pioneer Material Precision Tech.

http://www.pioneer-elastomer.com
3F NO.99 WO KONG ROAD, WUKU INDUSTRIAL PARK,
HSIN CHUANG, TAIPEI HSIEN, TAIWAN, R.O.C.
Tel:(02)2298-2360 Fax:(02)2298-2516 E-mail:pcric@pioneer-rubber.com

Test Item	**TGA 熱重損失分析**
Test Date	**2004/12/7**
Test Sample	**Silicone 50A**
Tester	**Lillian Hsieh**
Test Instrument	**熱重分析儀 TGA ，** **Thermogravimetric Analyzer，** **(Perkin Elmer)** 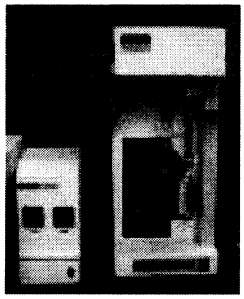
Test Condition	**Temperature Scan：50℃ ~ 800℃ at 20.0℃/min**

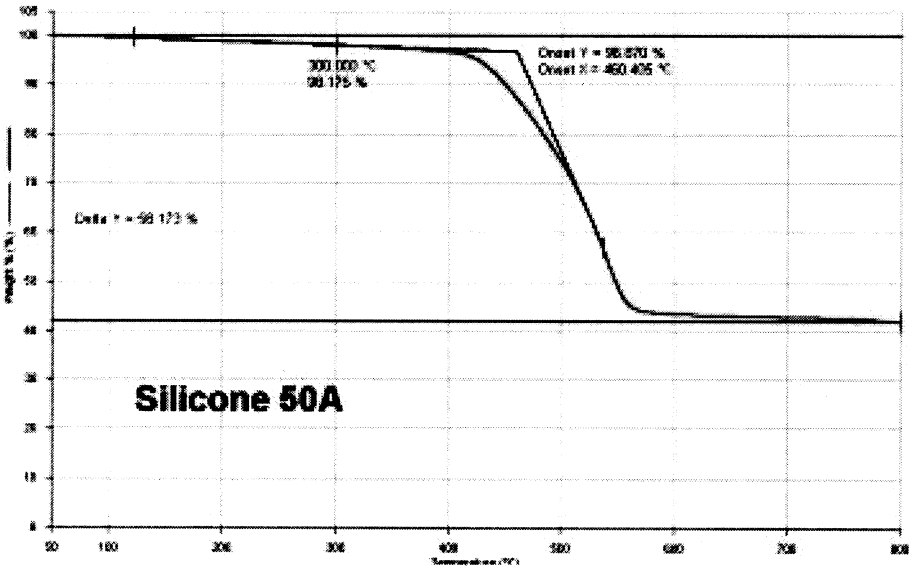

結論:

上圖為TGA熱重分析儀溫度掃描曲線，X軸為溫度(℃)，Y軸為重量百分比(wt%)。在300℃時熱重量為98.175 %，熱重損失為1.825 %，此熱種損失為低分子，材料裂解溫度約在290℃。

Plastics - Component

Guide Information

SHIN-ETSU CHEMICAL CO LTD E48923

ASAHI-TOKAI BLDG

6-1 OHTEMACHI 2-CHOME

CHIYODA-KU

TOKYO 100-0004, JAPAN

									H	D	
		Min.		H	H	R T I			V	4	C
		Thk	Flame	W	A	Elec	Mech		T	9	T
Material Dsg	**Color**	**mm**	**Class**	**I**	**I**		**Imp**	**Str**	**R**	**5**	**I**
KE-9(x)1@	ALL	0.75	HB	—	—	150	150	150	—	—	—
KE-9410@	ALL	0.75	HB	—	—	150	150	150	—	—	—
KE-9411@	ALL	0.75	HB	—	—	150	150	150	—	—	—
KE-944@	ALL	0.75	HB	—	—	150	150	150	—	—	—
KE-9510@	ALL	0.75	HB	—	—	150	150	150	—	—	—
KE-9511@	ALL	0.75	HB	—	—	150	150	150	—	—	—
KE-951K@	ALL	0.75	HB	—	—	150	150	150	—	—	—
KE-9610@	ALL	0.75	HB	—	—	150	150	150	—	—	—
KE-9611@	ALL	0.75	HB	—	—	150	150	150	—	—	—
KE-9710@	ALL	0.75	HB	—	—	150	150	150	—	—	—
KE-971T@	ALL	0.75	HB	—	—	150	150	150	—	—	—
KE-9810@	ALL	0.75	HB	—	—	150	150	150	—	—	—
TSSE-13@	ALL	0.75	HB	—	—	150	150	150	—	—	—

This page and all contents are Copyright © 2003 by Underwriters Laboratories Inc.®

The appearance of a company's name or product in this database does not in itself assure that products so identified have been manufactured under UL's Follow-Up Service. Only those products bearing the UL Mark should be considered to be Listed and covered under UL's Follow-Up Service. Always look for the Mark on the product.

SONY

TECHNICAL REPORT

High-strength high-performance both-sided adhesive tape

G4000

G4000, possessing the characteristics of a conventional tape, T4000, was developed as a non-solvent type, which is a both-sided adhesive tape containing the next-generation base material.

Advantages

- Both-sided adhesive tape containing base material with stronger adhesion than conventional tape (Acquired UL No.MH15431)
- Superior initial adhesiveness
- The adhesive strongly stick to the uneven surface of an urethane-foam.
- G4000 is not easily degraded in the environment and possesses advanced practical characteristics.
- This is the next generation of adhesive tape, whose impact on the global environment is small, because, unlike conventional tape, organic solvents are not used at coating.

Basic structure

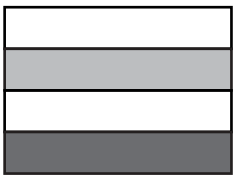

Name	Thickness
Acryl adhesive	(About 55 µm)
Nonwoven fabric	(About 40 µm)
Acryl adhesive	(About 55 µm)
Release film	(About 120 µm)

Specifications

Main component of the adhesive	Acrylic resin	Adhesive thickness (incl. base material)	0.15 mm
Color	Semitransparent	Shape	Rolled products
Base material	Nonwoven fabric		

Uses

As a permanent adhesive tape for metal or plastic nameplate and acrylic panel in cars, household appliances, computers and various mobile information devices.

Sony Chemicals Corporation

High-strength high-performance both-sided adhesive tape

G4000

Characteristics

❶ Peeling strength (180° peeling)

- Tape width : 20 mm
- Bonding condition : One stroke with 2 kg roller
- Leave the specimen for one day at room temperature.
- Atmosphere for measurement : 23°C ± 5°C, 65% ± 10%
- Peeling speed : 300 mm/min.
- Backing material : 25 μm PET

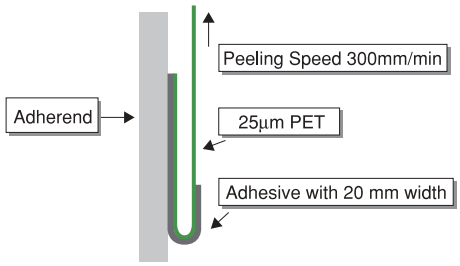

Fig. 1 Measurement method for 180° peeling

(N/2cm)

Adherend	SUS	ABS	PS	PP
Peeling strength	16.8	14.1	13.0	9.93

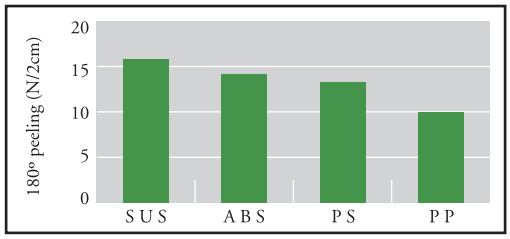

❷ Holding Power

- The area of tape attached : 25×25 mm
- Adherend : SUS304
- Bonding condition : One stroke with 2 kg roller
- Load : 1 kg
- Measure the gap (mm) after one hour.

Measurement temperature	40℃	60℃	80℃
Gap (mm)	0.3	0.4	0.6

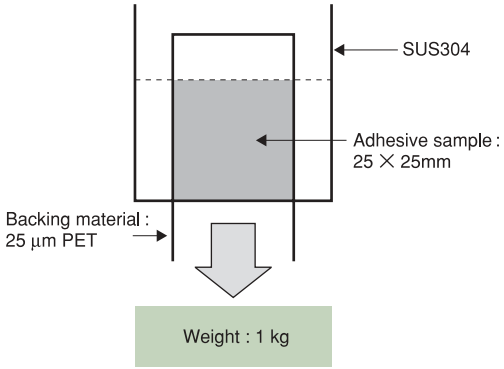

Fig. 2 Measurement method of Holding power

❸ Ball Tack (J. Dow method)

Ball Tack (Ball No.)	7 to 8

❹ Adhesiveness with an urethane-foam : Rebounding-proof(180-degree bending adhesion)

- Adhesion width : 20mm
- Adhesion length : 5mm, 10mm
- Examination temperature : RT, 50℃
- Adhesion conditions : 80% Compression
- Adherend(Support material) : 0.5mm thickness AL board
- Adherend : Urethane-foam 5mm thickness(Ether, Ester)

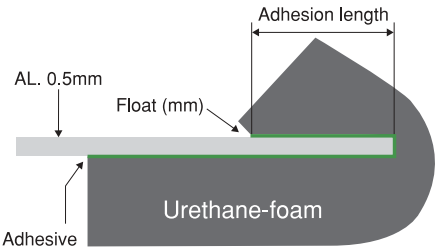

Fig.3 Rebounding-proof [urethane-foam] measuring method

Float height (mm) ○ : Less than 0.5 mm			Left at RT	Left at 50℃
Adhesion length 5mm	Ether	3days after	○	○
		7days after	○	○
	Ether	3days after	○	0.5mm
		7days after	0.5mm	0.5mm
Adhesion length 10mm	Ether	3days after	○	○
		7days after	○	○
	Ether	3days after	○	○
		7days after	○	○

●Note：This report, though based on reliable experiments in our laboratory, does not intend to guarantee the proformance as represented in it.
Users are requested to decided upon their own applications based on full understanding of their purposes and conditions.

Sony Chemicals Corporation

http://www.scc.sony.co.jp/

Head Office

Gate City Osaki East Tower,1-11-2 Osaki, Shinagawa-ku, Tokyo, 141-0032, Japan　Tel.81-3-5435-3946

Sony Chemicals Corporation of America	1001 Technology Drive, Mount Pleasant, Pennsylvania 15666-1766 Tel.1-724-696-7500　http://www.sonychemicals.com
Sony Chemicals Singapore Pte. Ltd.	83Clemenceau Avenue #10-03/04 UE Square Singapore 239920 Tel.65-836-1181
Sony Chemicals Europe B.V.	Diamantlaan 27 2132 WV Hoofddorp The Netherlands Tel.31-23-565-0606
Sony Chemicals (Suzhou) Co.,Ltd.	19 Zhu Yuan Road, New District, Suzhou, Jiangsu, 215011 China Tel.86-512-68252005

REVISIONS							
REV	DESCRIPTION	DFT	DATE	CHK	DATE	APVD	DATE
A	DRAWN	SMOKING	04.08.18	JEFF			
B							

COLOR : WHITE

Specific Gravity : 2.3

Thermal Conductivity : >4.0 Watt/m-K

Thermal Impedance : <0.06 °C-in²/Watt

Dielectric Constant A : 5.1 ohm-cm

Dissipatiom Factor A : 0.005

Dielectric Constant B : 5 ohm-cm

Dissipatiom Factor B : 0.001

Operation Temperture : -50~240 °C

Silicone Compounds : 50%

Carbon Compounds : 20%

Metal Oxide Compounds : 30%

Weight : 1000g±0.2

Item	Part Description	Part Number	Q'TY

VETTE Vette (BVI) Ltd		MATERIAL SEE NOTE	FINISH SEE NOTE	UNIT MM	SCALE 1:1	PART NAME: Grease : ST350	DWG NO. 21ST-16
	TOLERANCE UNLESS NOTED	0.0~ 5.0 ±0.2 5.0~ 20.0 ±0.3 20.0~ 50.0 ±0.5 50.0~100.0 ±0.9 R=0.5 ANGULAR ±3°	APPROVED BY Captain	CHECKED BY Sally	DRAWN BY SMOKING	DATE 04.08.18	PART NO. 021ST15	REVISION A

http://www.vette.com.tw Tel:886-2-77201666 Fax:886-2-77201166 http://www.vette.com.tw Tel:86-769-3735971 Fax:86-769-3738140

REV. B 2004/07/01

ShenZhen Blancestars Electronic Co.,LTD

Product Confirm

The Name of Company:DongGuang YouJu
The Name of Product:Thermal Compound
Specification:ST350-CN1000
The Date of Delivery:2005/1/8

Confirm Cachet		
Assessor	Acknowledge	Entrepreneur
The Number of Acknowledge		
The Number of Material		
Date		

TaiWan Company:BALANCESTARS CO.,LTD

TEL：886-2-22746352 FAX:886-2-22746381

ADD:18/FL No.255 The Third Segment JingCheng Road TuCheng City TaiBei County

ShenZhen Company: ShenZhen Blancestars Electronic Co.,LTD

TEL:0755-25808260/25808461 FAX:0755-25808463

ADD:6/FL NanHu Industrial Zone No.58 Dong Chang Road LuoHu area ShenZhen China

深圳市倍能事達電子有限公司
SHENZHEN BALANCE STARS ELECTRONIC CO.,LTD
深圳地址:羅湖區東昌路58號南湖工業區6樓
聯系電話:0755-25808461/25808462/25808261 傳真:0755-25808463

ST350 導熱膏 規格與成份表

規 格

項 目		單位	環 境	測試方法	測試結果
顏色	Color	No	200℃/24Hours	Visual	**White**
熱傳導系數	Thermal Conductivity	W/m-K	No	ROCT8.140-82	＞1.066
熱阻抗	Thermal Impedance	℃-in²/W	25℃	ROCT8.140-82	**＜0.22**
比重	Specific Gravity	No	25℃	ASTM D1475	＞2.3
蒸發量	Evaporation	%	200℃/24Hours	Fed.Std.791	＜0.001
滲油量	Bleed	%	200℃/24Hours	Fed.Std.791	＜0.05
絕緣常數	Dielectric Constant A	No	100Hz	ASTM D150	＞5.1
耗散系	Dissipation Factor A	No	100Hz	ASTM D150	＜0.005
粘度值	Viscosity	CPS	25℃	GB/T-10247	78
入度	Thixotropic Index	℃	25℃	GB/T-269	380±10
工作溫度范圍	Operation Temperture	℃	No	No	**-50~240℃**

成 份

矽化合物	Silicone Compounds	50%
碳化合物	Carbon Compounds	20%
氧化金屬化合物	Metal Oxide Compounds	30%

包 裝

類 別	內 容	外包裝	ST	SP	TU	CN
			軟管	迷你包	短針管	罐裝
ST350	白色	藍色	無	0.5g 1g 1.5g	0.5g 1g 1.5g	30g , 150g , 1kg

產品圖片:

罐裝型(CN1000)　　針管型(TU15)　　迷你包型

REVISIONS							
REV	DESCRIPTION	DFT	DATE	CHK	DATE	APVD	DATE
S-00	DRAWN	Peter	04.12.23	SALLY	04.12.23		

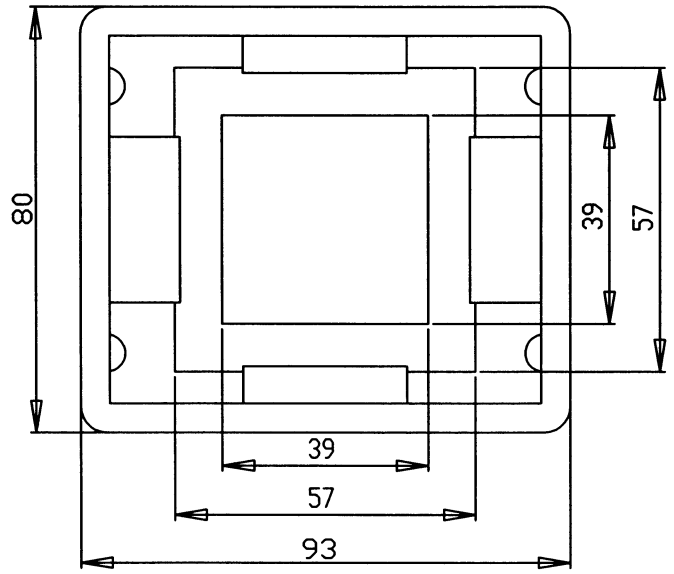

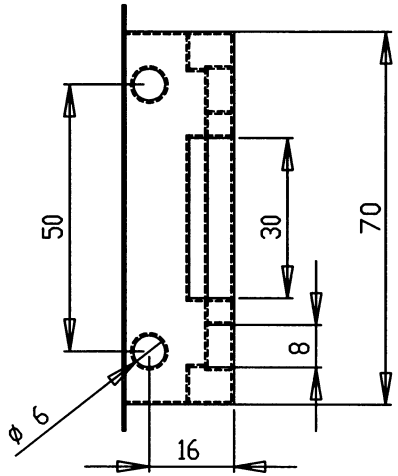

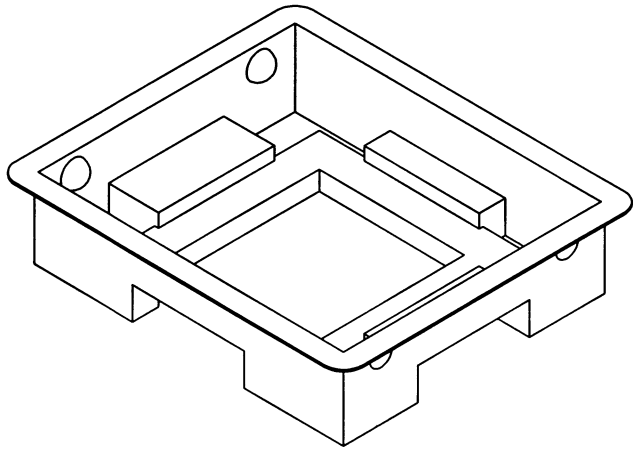

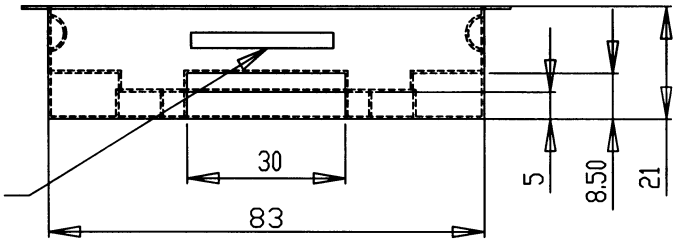

P/N: 0902430

THICKNESS=0.5MM

Item	Part Description	Part Number	Q'ty

Vette (BVI) Ltd		MATERIAL PVC	FINISH Transparent	UNIT mm	SCALE	PART NAME: F041251(04122101)	DWG NO. 9020-431
	TOLERANCE UNLESS NOTED ±1.0 R<0.3	APPROVED BY Captain	CHECKED BY Sally	DRAWN BY Peter	DATE 2004/12/23	PART NO. 0902430	REVISION S-00

http://www.vette.com.tw Tel:886-2-77201666 Fax:886-2-77201166 http://www.vette.com.tw Tel:86-769-3377088 Fax:86-769-3710088

REV. C 2004/11/01

REVISIONS								
REV	DESCRIPTION	DFT	DATE	CHK	DATE	APVD	DATE
S-00	DRAWN	Peter	04.12.23	SALLY			

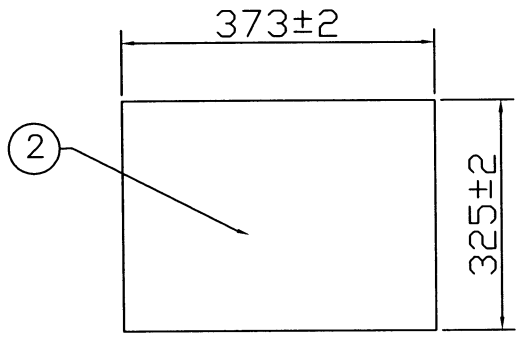

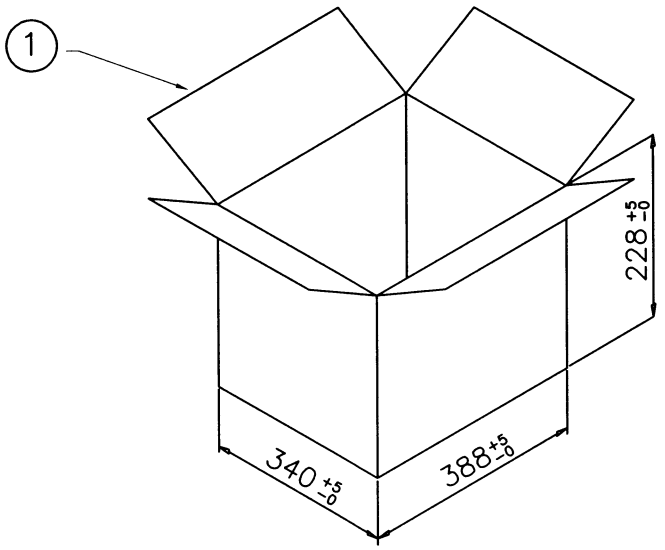

1. 16PCS/層,48PCS/箱
2. 外箱MARK 參照 "CARTON MARK 圖樣"
   圖紙之最新版本

Item	Part Description	Part Number	Q'TY
2	平卡 3層瓦楞紙 B33	0904011	4
1	外箱 5層瓦楞紙 A=A	0900011	1

Vette (BVI) Ltd	MATERIAL	FINISH	UNIT	SCALE	PART NAME:	DWG NO.
			MM	1:1	HS07 F041251(04122101)	90-HS07-01
TOLERANCE UNLESS NOTED: 0.0~ 5.0 ±0.2, 5.0~ 20.0 ±0.3, 20.0~ 50.0 ±0.5, 50.0~100.0 ±0.9, ANGULAR ±3°	APPROVED BY: Captain	CHECKED BY: Sally	DRAWN BY: Peter	DATE: 04/12/23	PART NO.: Show as above	REVISION: S-00

http://www.vette.com.tw Tel:886-2-77201666 Fax:886-2-77201166
http://www.vette.com.tw Tel:86-769-3377088 Fax:86-769-3710088

REV. C 2004/11/01